FIRE STREAK

ESTES INDUSTRIES
1295 H STREET
PENROSE, CO 81240 USA

FIRE STREAK™

FLYING MODEL ROCKET KIT EST 2107

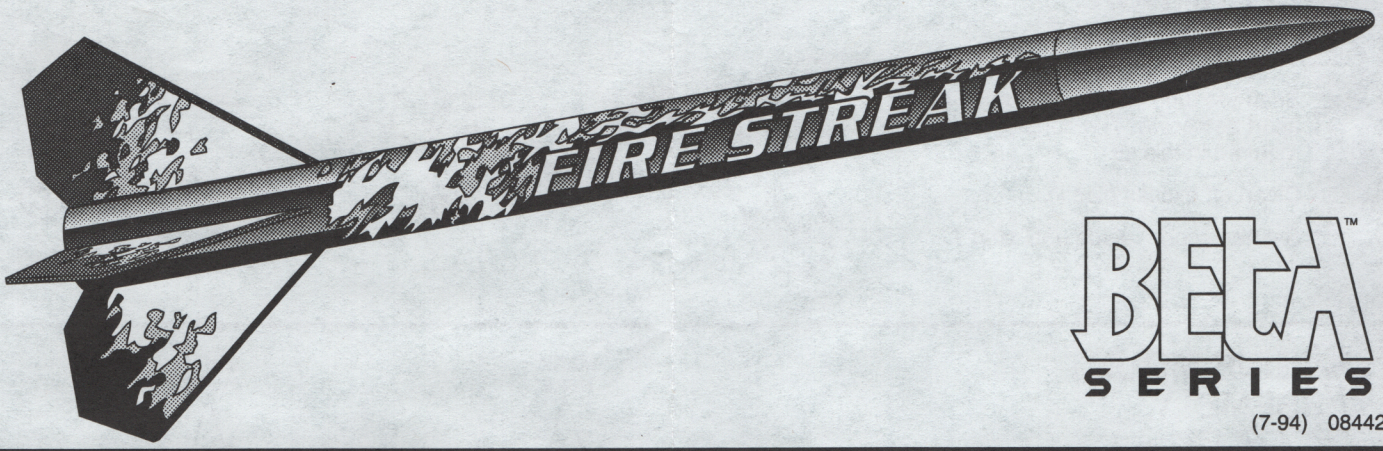

BETA™ SERIES

(7-94) 084426

HOW TO USE THESE INSTRUCTIONS:

READ ALL INSTRUCTIONS BEFORE STARTING WORK ON THIS MODEL.

A. This rocket, incorporating basic model rocketry construction techniques, will help you in the continuing development of your rocketry modeling skills.

B. Read each step first and visualize the procedure thoroughly in your mind before starting construction.

C. Lay the parts out on the table in front of you. (Check inside tubes for any small parts.)

D. Use the parts layout to match all parts contained in kit.

E. Collect all construction supplies that are not included in this kit.

F. Test fit parts before applying any glue.

G. The construction supplies required for each step are listed at the beginning of each step.

H. Check off each step as you complete it.

PARTS LAYOUT

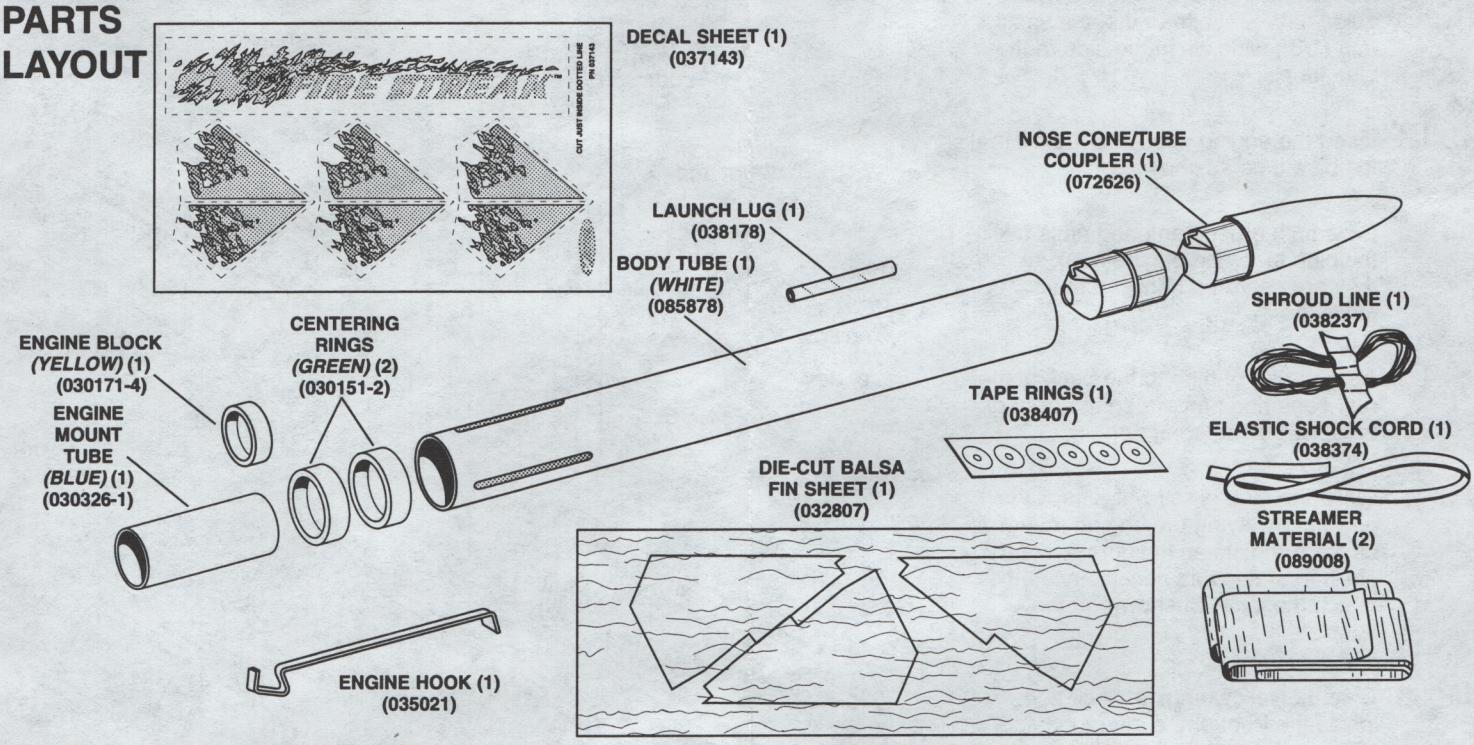

EXTREMELY IMPORTANT: THE PARTS LAYOUT IS FOR REFERENCE ONLY!

The parts layout is only intended to assist you in locating the parts included in this kit.

CONSTRUCTION SUPPLIES

In addition to the parts included in your kit, you will need these construction supplies. Each step shows which supplies will be required.

RULER | SCISSORS | HOBBY KNIFE | PENCIL | SANDPAPER | GLUE (white or yellow) | MASKING TAPE 19 mm (3/4") wide | Primer (optional) | SPRAY PAINT (Purple) (optional) (felt markers may be used instead) | ROCKET BUILDER'S MARKING GUIDE - EST 2227 (optional)

GLUE IS APPLIED TO SURFACES SHOWN IN RED.

ROCKET ASSEMBLY

1. NOSE CONE PREPARATION

A. ☐ Snap the tube coupler and nose cone apart as shown. The coupler is not required in this kit.

B. ☐ Clean off excess plastic.

C. ☐ Set nose cone aside until step 7.

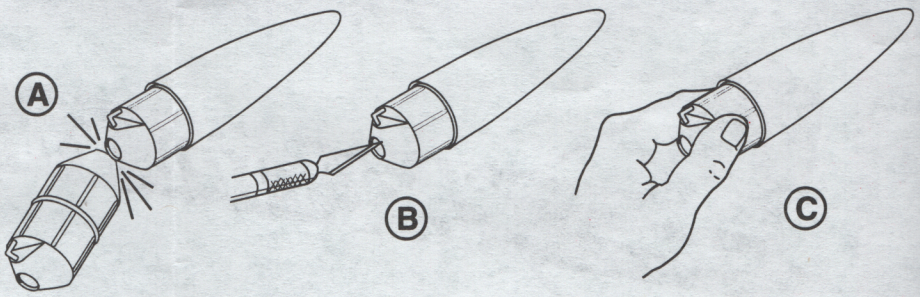

2. ENGINE MOUNT ASSEMBLY

A. ☐ Lay the blue engine mount tube on the template provided as shown and mark the tube with a pencil at all red lines.

B. ☐ Place the yellow engine block against the side of the blue engine mount tube at the front end and use it as a guide for your knife to make a small 3 mm (1/8") wide slit in the side of the blue tube.

C. ☐ Insert the engine hook into the slit in the blue tube as shown.

D. ☐ Slide both green centering rings over the blue tube and engine hook so they are centered between their marks.

E. ☐ Apply a ring of glue to the back of the rear centering ring and to the front of the forward centering ring.

F. ☐ While the glue is still wet, check the position by laying the engine mount on the template as in figure A. Adjust position of rings as necessary so they match the location shown on the template.

G. ☐ Glue the yellow engine block ring inside the front of the blue tube so it touches the metal engine hook.

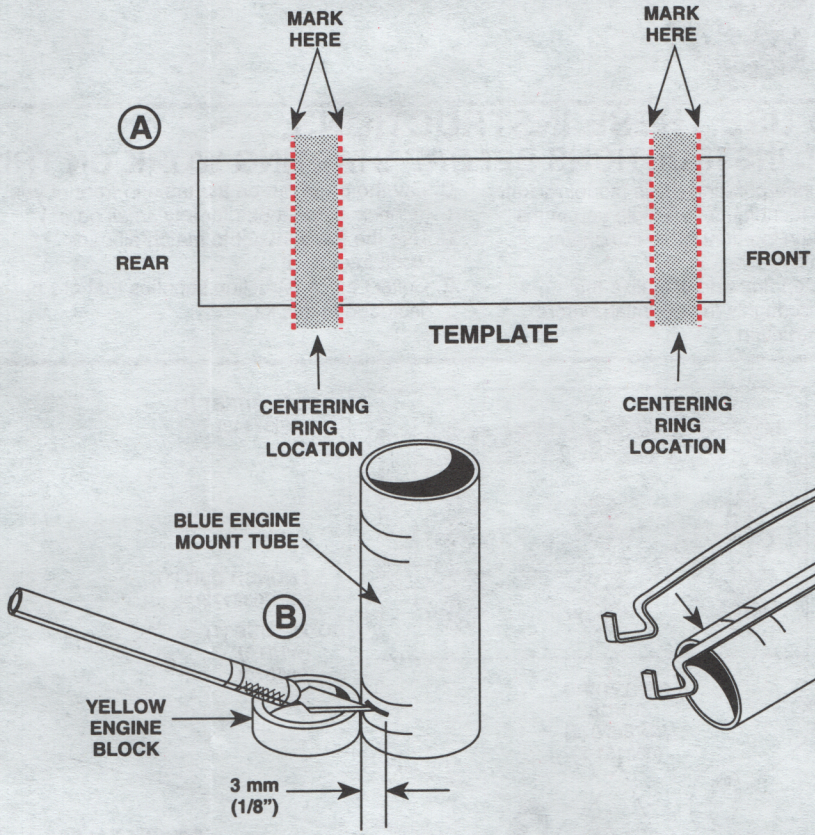

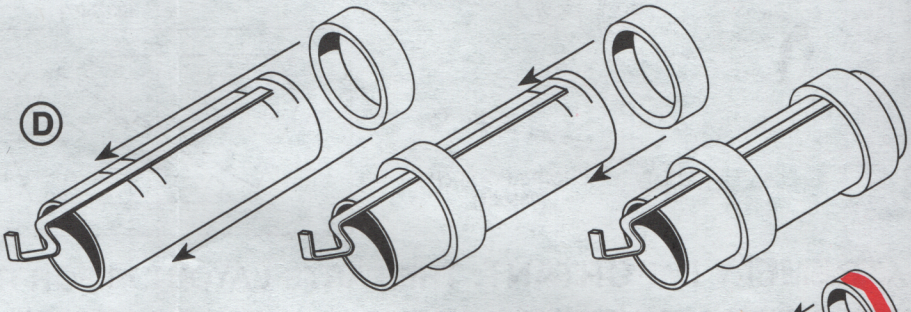

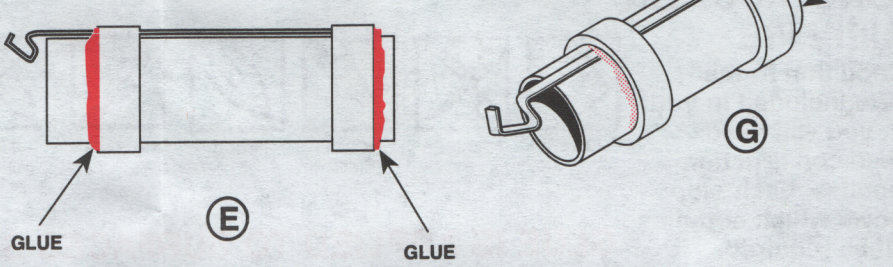

3. FIN PREPARATION - DIE CUT BALSA SHEET

NOTE: Read before proceeding with this step.
- Since your fins are not completely cut out of the balsa sheet, you will need to work carefully with your hobby knife to free the fins from the sheet.
- Be sure to cut completely around each fin outline before attempting to remove fins from the sheet.
- Check both sides of the sheet to make sure you cut through.
- Pay close attention to the areas where die cutting is not complete.
- As you cut around each fin, cut away from the adjacent fins so you will not damage the other fins on the sheet.

A. ☐ Sand balsa die cut fin sheet smooth with #400 grit sandpaper.

B. ☐ Free the fins from the sheet stock with your hobby knife. You will have three fins.

C. ☐ Keep a piece of scrap wood to use as a glue applicator in step 4C.

D. ☐ Lay sandpaper, rough face up, on the table. Stack the three fins together by size and lightly sand the edges smooth and flat.

E. ☐ Optional: For a better-looking and higher-performance rocket, round the leading edges and streamline the trailing edges of each fin.

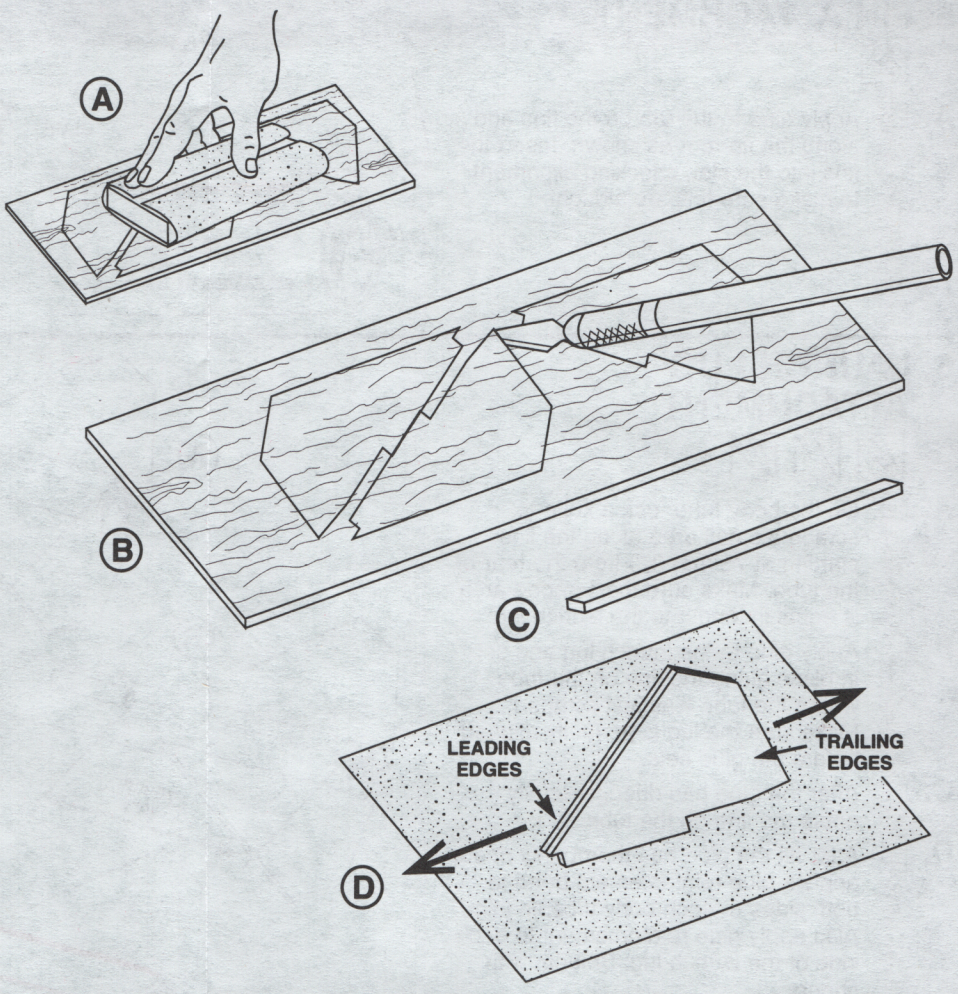

4. ENGINE MOUNT INSTALLATION

NOTE: Make sure all glue joints are dry before starting this step!

A. ☐ Test fit each fin by inserting the tab on the fin between the green centering rings as shown. Sand tabs as necessary. Do not glue!

B. ☐ Draw a straight line lightly down the side of the tube between two slots. A door frame can be used to help make the line straight. Optional: The Estes Rocket Builder's Marking Guide (EST 2227) is great for marking body tubes.

C. ☐ Using your glue applicator from step 3C, apply glue inside the body tube, just in front of the slots. Apply glue to the rear centering ring as shown. Slide the engine mount tube into body tube, so that the slots are centered between the two green centering rings and the engine hook is aligned with the line drawn between two slots.

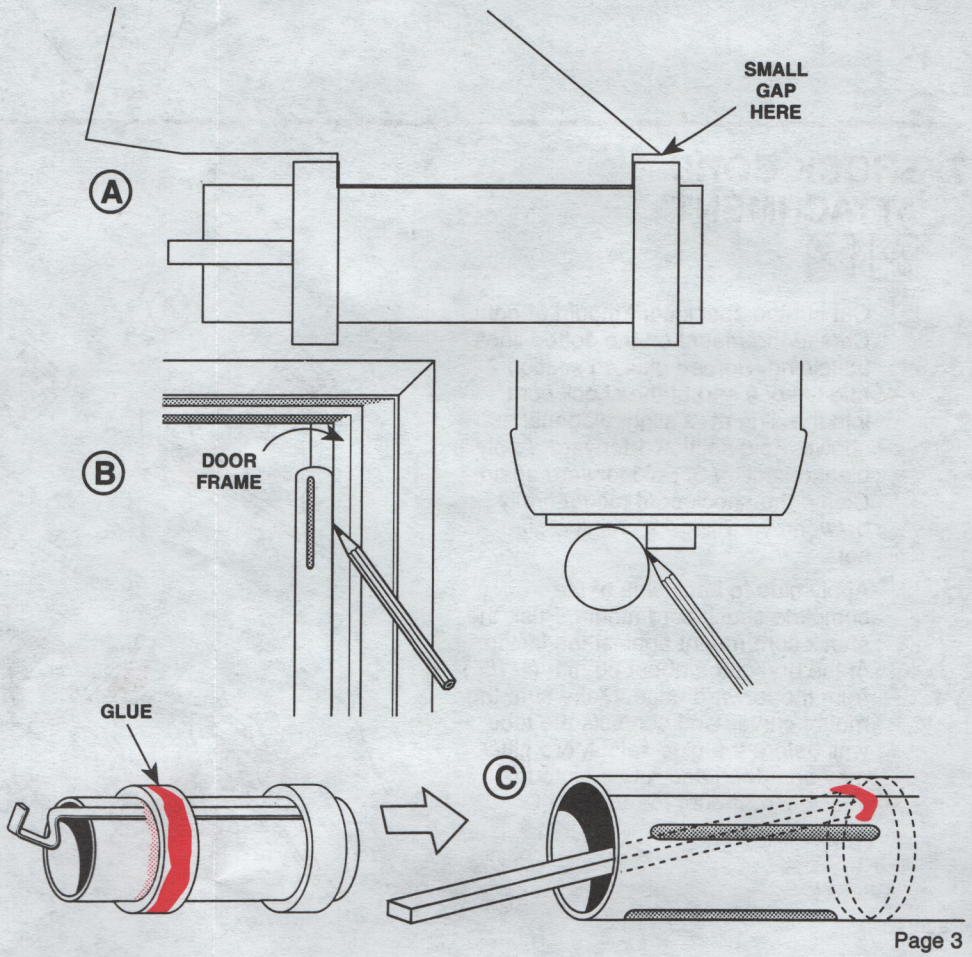

5. FIN ATTACHMENT

A. ☐ Apply glue to the tab on the fins and along the fin root as shown. Insert the fins into the slot, checking alignment to make sure fins are straight.

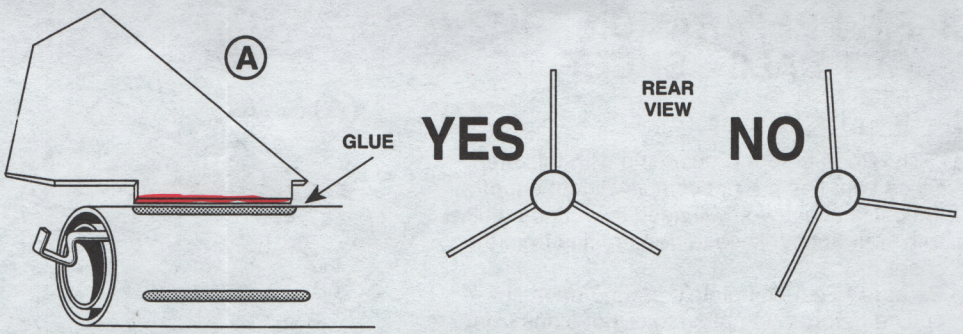

6. LAUNCH LUG ATTACHMENT

A. ☐ On the body tube, use a knife to scrape a small area along the line starting at 76 mm (3") from the rear of the tube. Make sure the scraped area is equal in length to the launch lug.

B. ☐ Apply glue to the launch lug and set in place along the line on the tube where the tube was just scraped. Make sure the lug is perfectly aligned before the glue sets.

C. ☐ After the glue has dried, carefully erase the line on the tube.

D. ☐ After all the glue has thoroughly dried, apply a glue reinforcement bead to both sides of each body tube/fin joint. Also apply glue reinforcement to each side of the launch lug. Smooth with fingers.

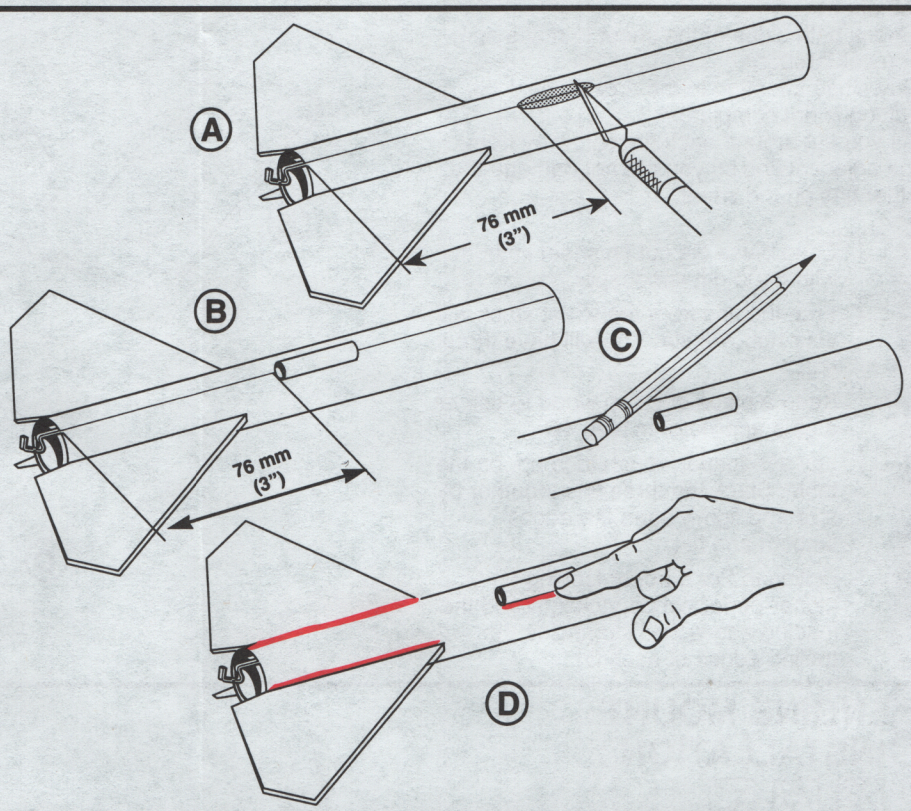

7. SHOCK CORD ATTACHMENT

A. ☐ Cut out the shock cord mount at right. Crease the mount on the dotted lines by folding. Spread glue on section 2 and lay one end of the shock cord into the glue at a slight diagonal as shown. Fold section 1 forward. Apply glue to section 3. Fold forward again. Clamp the shock cord mount firmly between your fingers until the glue sets.

B. ☐ Apply glue to back side of the complete shock cord mount. Push the shock cord mount against the inside of the body tube about 38 mm (1-1/2") from the forward edge. Make sure the mount curves and contacts the tube wall before the glue sets. More glue may be added and rubbed into the shock cord mount for an even stronger bond.

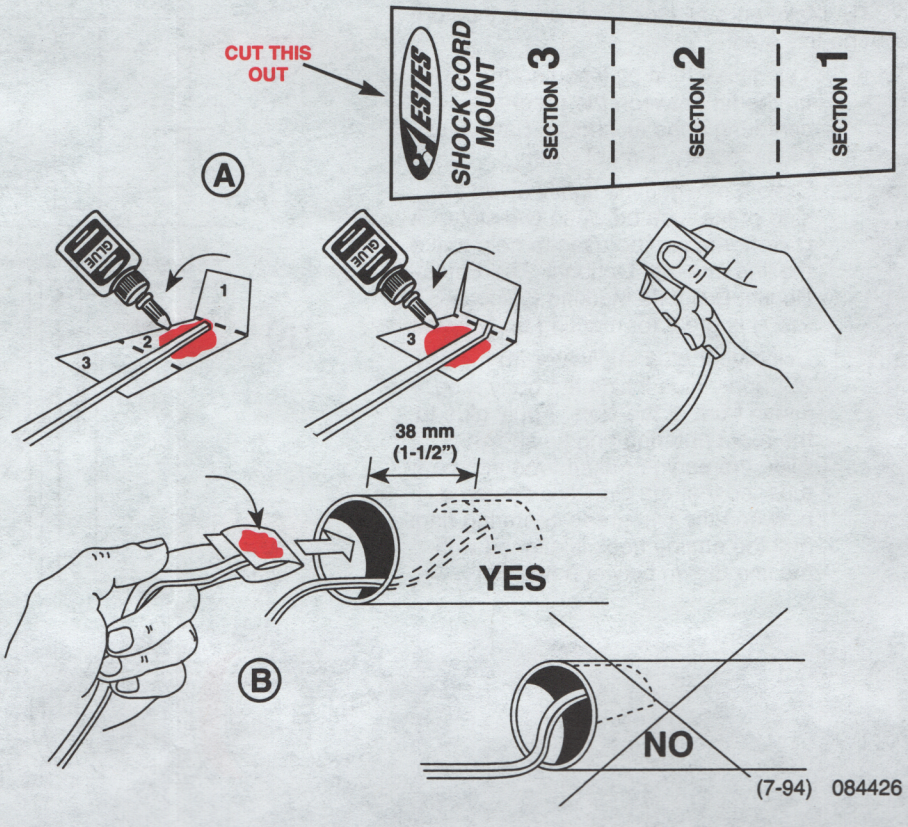

(7-94) 084426

8. STREAMER ATTACHMENT

- **A.** ☐ Press a tape ring onto one end of both streamers. Rub the tape ring firmly into place.
- **B.** ☐ Trim the streamer corners away from the tape ring as shown. Punch a hole through the tape ring with a sharp pencil. (Do not use a dull pencil or ballpoint pen.)
- **C.** ☐ Cut a 200 mm (8") length from the shroud line.
- **D.** ☐ Pass one end of the line through the center of both tape rings and tie the line in a double knot.
- **E.** ☐ Tie the free end of the line to the nose cone loop. Tie the free end of the shock cord in a double knot to the nose cone loop.

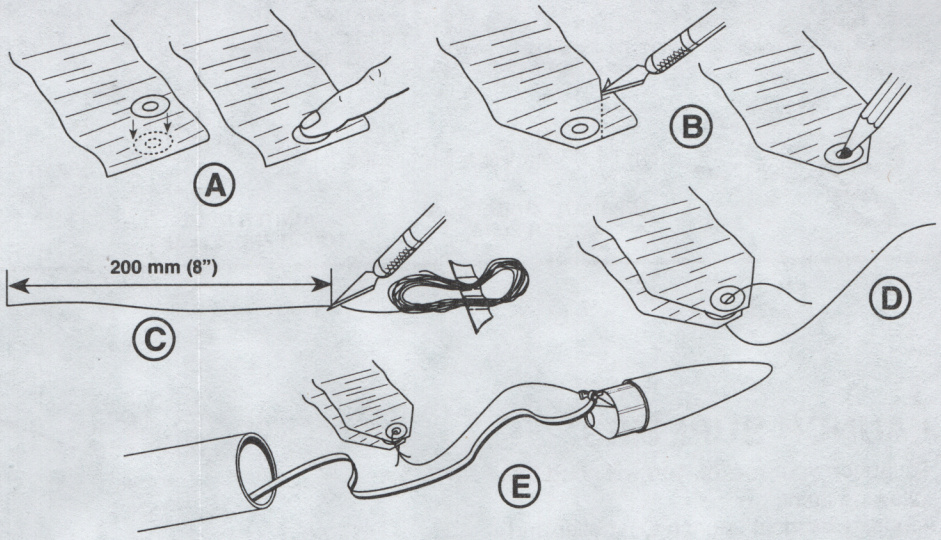

9. FINISHING YOUR ROCKET

- **A.** ☐ Before you paint your rocket, make sure all of the glue joints are completely dry.
- **B.** ☐ Optional: For a smoother and better-looking finish, spray a coat of automotive primer on your rocket. Do not apply too much. Lightly sand the rocket with a 400 to 600 grit sandpaper. Apply another coat if needed. Sand between coats. The primer will allow the final coats of paint to adhere better to the rocket. Several light mist coats of paint are preferable. Too much paint will add to the rocket's weight.
- **C.** ☐ Paint body as shown. Use spray enamel to paint your model rocket or use your magic markers.
- **D.** ☐ Refer to the illustration on the front of the color panel for paint locations and decal placement.

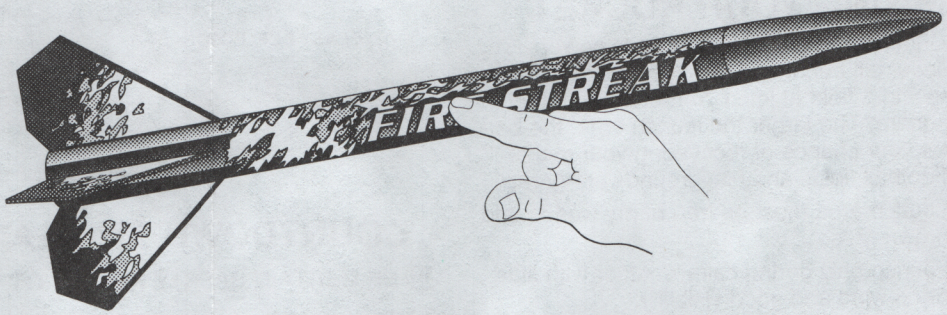

WHAT TO EXPECT WHEN FLYING YOUR FIRE STREAK™ ROCKET

At apogee (the highest point in your rocket's flight), the nose cone pops off to deploy the multi-colored Fire Streak™ streamers. Watch the incredible sky display created by its two glimmering streamers! These streamers create drag which will safely lower your Fire Streak™ to the ground in one piece. With the largest engine (C6-7), you can expect your rocket to fly 350 meters (1150 feet). The smallest engine, a 1/2A6-2, will deliver the Fire Streak™ to 20 meters (65 feet).

ROCKET PREFLIGHT

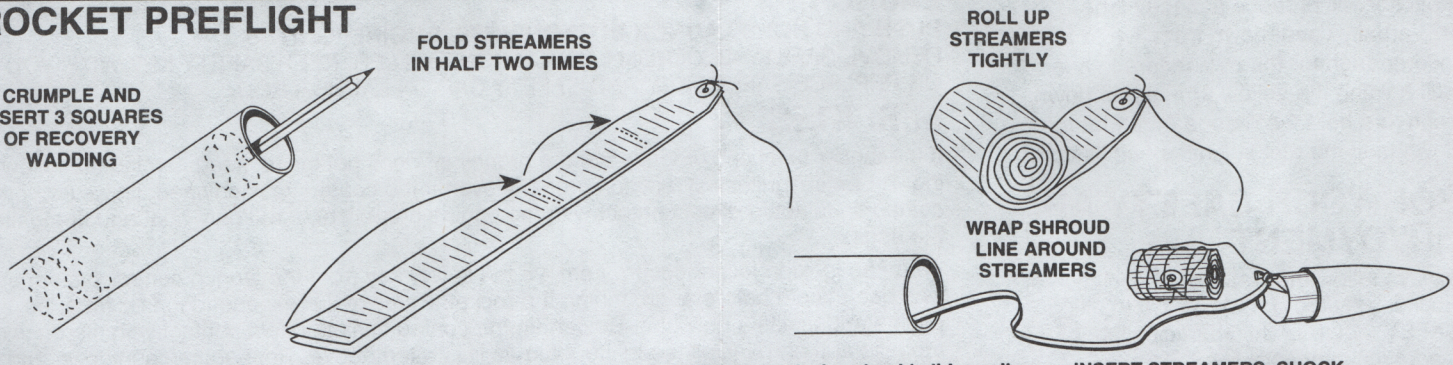

PREPARE ENGINE

NOTE: Igniter plugs come with rocket engines. If your engines did not come with plugs, follow the instructions that came with the engines.

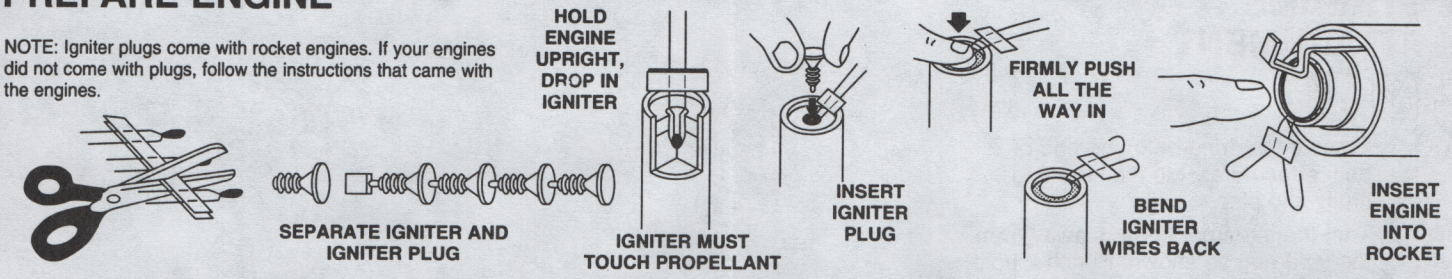

LAUNCH SUPPLIES

To launch your rocket, you will need the following items:
--Estes Electrical Launch Controller and Launch Pad
--Estes Recovery Wadding EST 2274
--Recommended Estes Engines: 1/2A6-2 (First Flight), A8-3, A8-5, B4-4, B4-6, B6-4, B6-6, B8-5, C6-5, C6-7
To become familiar with your rocket's flight pattern, use a 1/2A6-2 engine for your first flight.

Use only Estes products to launch this rocket.

FLYING YOUR ROCKET

Choose a large field away from power lines, tall trees, and low flying aircraft. Try to find a field at least 76 meters (250 feet) square. The larger the launch area, the better your chance of recovering your rocket. Football fields and playgrounds are great.

Launch area must be free of dry weeds and brown grass.

Launch only during calm weather with little or no wind and good visibility.

If you use the E2™ or Command Control™ Launch Controllers to fly your models, use the following launch steps:
A. After attaching micro-clips, etc., insert safety key into the controller receptacle. If the igniter clips have been attached properly to the igniter, the red L.E.D. will now begin to flash on and off and the audio continuity indicator will beep on and off.
B. Hold the yellow (left) arm button down. The L.E.D. will stop flashing and the audio indicator will produce a steady tone.
C. Verbally count down from five to zero loud enough for the bystanders to hear. Still holding the yellow arm button down, push and hold the orange (right) button down until the rocket ignites and lifts off.

FOR YOUR SAFETY AND ENJOYMENT

Always follow the National Association of Rocketry (NAR) MODEL ROCKETRY SAFETY CODE while participating in any model rocketry activities.

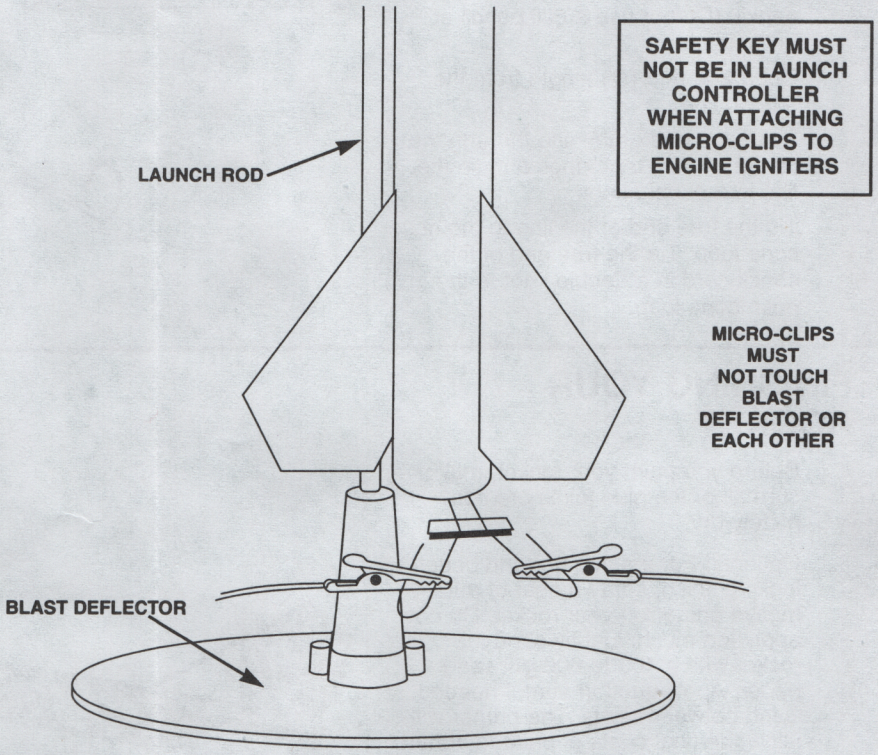

COUNTDOWN AND LAUNCH

⑩ BE CERTAIN SAFETY KEY IS NOT IN LAUNCH CONTROLLER.

⑨ Remove safety cap and slide launch lug over launch rod to place rocket on launch pad. Make sure the rocket slides freely on the launch rod. Make sure micro-clips are clean for a good electrical contact.

⑧ Attach micro-clips to the igniter wires. Arrange the clips so they do not touch each other or the metal blast deflector. Attach clips as close to protective tape on igniter as possible.

⑦ Move back from your rocket as far as launch wire will permit (at least five meters - 15 feet).

⑥ INSERT SAFETY KEY to arm the launch controller.

Give the audible countdown 5...4...3...2...1

LAUNCH!!

PUSH AND HOLD LAUNCH BUTTON UNTIL ENGINE IGNITES
REMOVE SAFETY KEY FROM LAUNCH CONTROLLER. KEEP SAFETY KEY WITH YOU OR REPLACE SAFETY KEY AND SAFETY CAP ON LAUNCH ROD.

MISFIRES

If the igniter functions properly but the propellant does not ignite, keep in mind the following: An Estes igniter will function properly even if the coated tip is chipped. However, if the coated tip is not in direct contact with the engine propellant, it will only heat and not ignite the engine.

When an ignition failure occurs, remove the safety key from the launch control system and wait one minute before approaching the rocket. Remove the expended igniter from the engine and install a new one. Be certain the coated tip is in direct contact with the engine propellant, then reinstall the igniter plug as illustrated above. Repeat the countdown and launch procedure.

(7-94) 084427

600 DPI
No.C303SR
3/32”

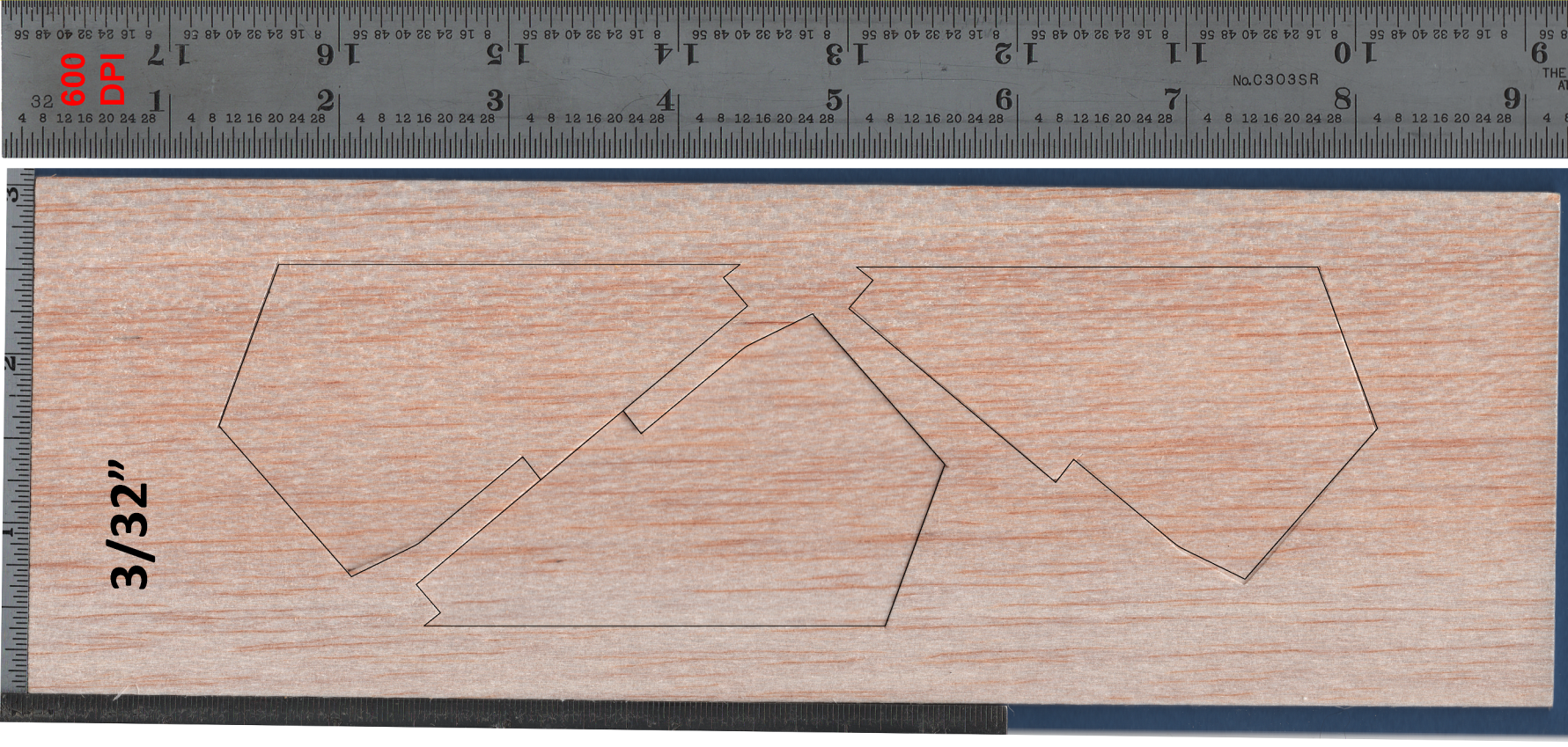
600 DPI
No.C303SR
3/32”

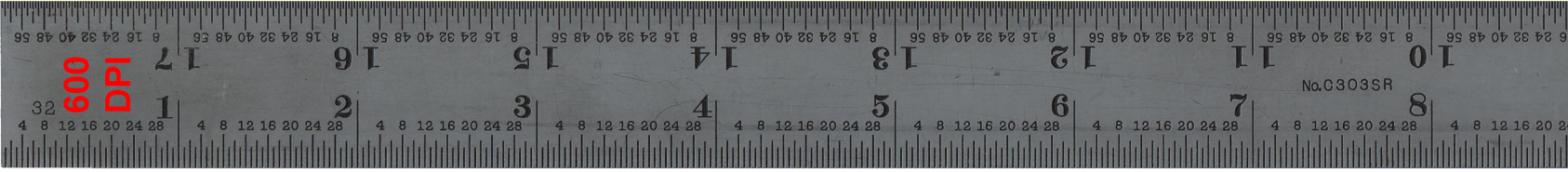
600 DPI
No.C303SR

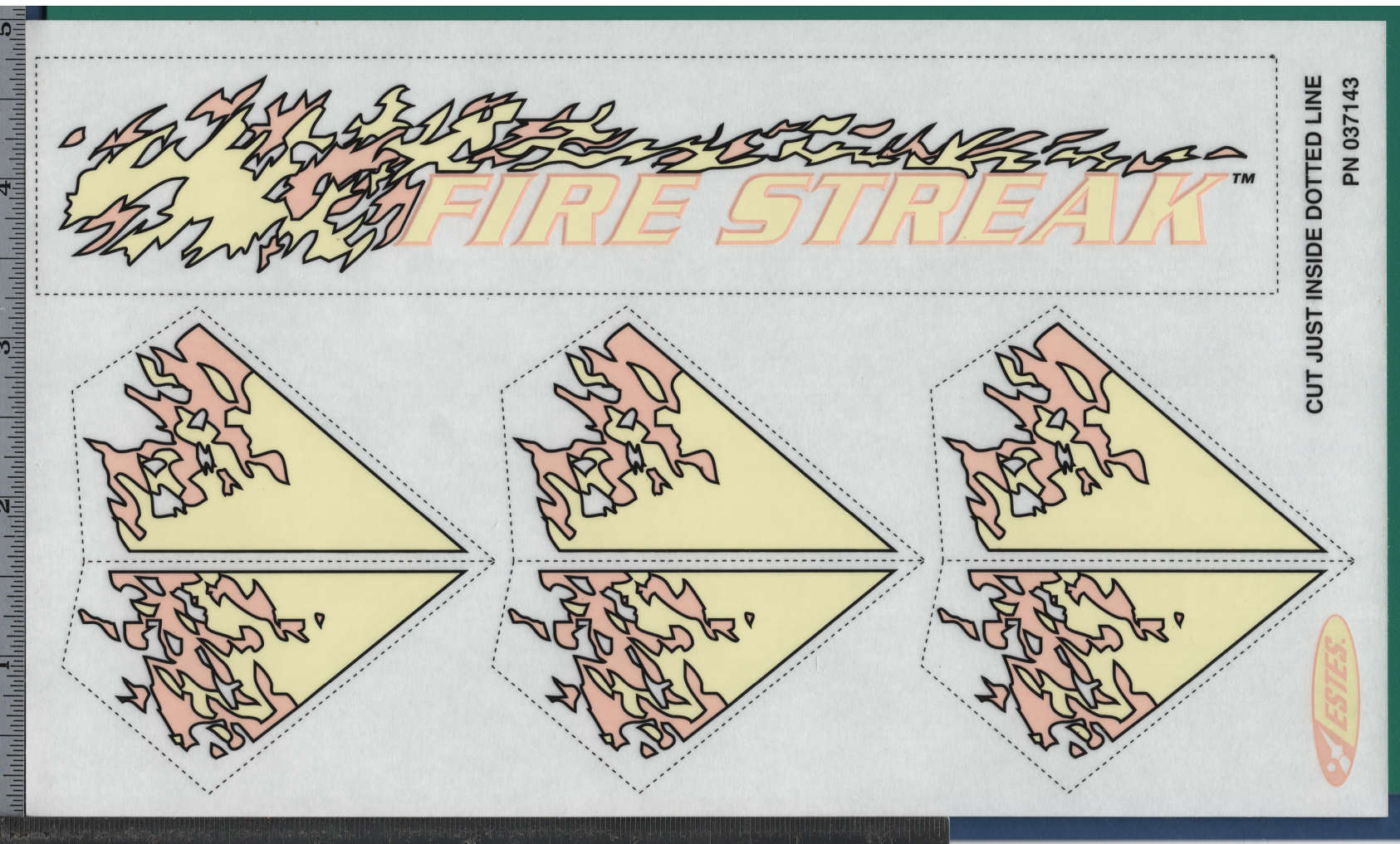
FIRE STREAK™
CUT JUST INSIDE DOTTED LINE
PN 037143
ESTES

PARTS LIST KIT N0. 2107 - Firestreak								
Quantity	Description	Type	Number	Details1	Details2	Details3	Details4	Comment
1	Nose Cone/Tube Coupler	NC-1090	72626	OD 1.090"	3.5" Long	W/Coupler	White	Blow Molded
1	PAPER BODY TUBE	HBT-1090	085878	11" long	ID 1.044"	OD 1.090"	0.023" Wall	White slotted for 3 fins
2	CENTERING RINGS	AR-201090	030151-2	0.25" long	0.737" ID	ID 1.043"	0.153" wall	Green
1	ENGINE BLOCK	EB-20	30171-4	.708" OD	.65" ID	.25" thick	fits BT-20	Yellow
1	PAPER BODY TUBE	BT-20J	30326-1	2.75" long	0.710" ID	0.736" OD	0.013" wall	Blue
1	ENGINE HOLDER	EH-2	35021	2.8" long	.100" wide	.025" thick	18/24mm	Thumb Saver
1	BALSA FIN STOCK	*BFS-30	32108	3" wide	9" long	3/32" thick	0.09375	Scan
1	LAUNCH LUG	LL-2B	38178	5/32" ID	1/8" rod	2-3/8" long		Mylar
1	Tape Disc	TD-3F	38407	1/2" dia.	Vinyl	Self-Stick	W/Center Hole	Set of 6
1	Shroud Line	SLT-72	38237	72"	.020" diameter	Twisted cotton		
1	Shock Cord	SC-1	38374	18" long	1/8" wide			Rubber
1	Plastic Streamer	SM89008	89008	1/75" wide	36" long	Red & Gold	Ribbed Mylar	Set of 2
1	Decal	SD2107	37143	5" wide	8.5" long	Flo.Ylo,Org&Blk	Self Stick	Scan
*Die-Cut Balsa #32807								

ESTES
BETA SERIES
FIRESTREAK™
FLYING MODEL ROCKET
SKILL LEVEL 1
STREAMERS FLICKER AND CRACKLE LIKE FIRE!
THROUGH-THE-WALL BALSA FINS FOR EASIER BETA CONSTRUCTION
EXTRA-LONG, METALLIC STREAMER RECOVERY
SPECTACULAR, SELF-ADHESIVE DECALS
FLIES TO MORE THAN 305 METERS (1,000 FEET)!
Recommended for ages 10 and up with adult supervision for those under 12.
EST 2107
ESTES
FIRE STREAK

FIRE STREAK
CUT JUST INSIDE DOTTED LINE

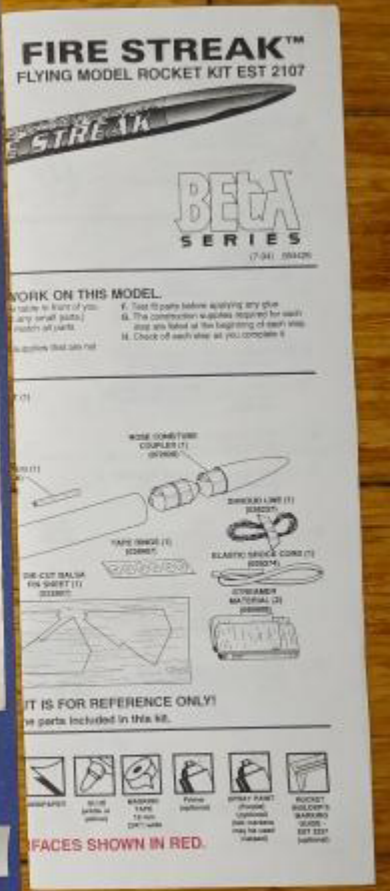
FIRE STREAK™
FLYING MODEL ROCKET KIT EST 2107
BETA SERIES
WORK ON THIS MODEL.
IT IS FOR REFERENCE ONLY!
FACES SHOWN IN RED.

ESTES
World Leader in Model Rocketry
MODEL ROCKET
ACCESSORIES
HBT-1090
BODY TUBES
TUBES DE CORPS
RUMPFRÖHRE
NC-1090
NOSE CONES
COIFFES
RAKETENSPITZEN
FLYING MODEL ROCKET
Made in USA

ESTES

MODEL ROCKET

ACCESSORIES

NC-1090

NOSE CONES

▼ Fits HBT-1090 body tubes (EST 303091)

OIFFES

S'adaptent aux tubes de corps HBT-1090 (EST 303091)

AKETENSPITZEN

EST 2107 FLYING MODEL ROCKET

ESTES BETA SERIES

SKILL LEVEL 1

STREAMERS FLICKER AND CRACKLE LIKE FIRE!

FIRESTREAK™

ESTES BETA SERIES

FIRE STREAK

FLYING MODEL ROCKET

ESTES

FLYING MODEL ROCKET

SKILL LEVEL 1

THROUGH-THE-WALL BALSA FINS FOR EASIER BETA CONSTRUCTION

- EXTRA-LONG, METALLIC STREAMER RECOVERY
- SPECTACULAR, SELF-ADHESIVE DECALS
- FLIES TO MORE THAN 305 METERS (1,000 FEET)!

Recommended for ages 10 and up with adult supervision for those under 12.

EST 2107 ESTES

ESTES

EST 2107

FIRE STREAK™

FLYING MODEL ROCKET

STREAMERS FLICKER AND
CRACKLE LIKE FIRE!

SERIES BETA

SKILL LEVEL 1

ESTES

ESTES

SKILL LEVEL 1

BETA SERIES

STREAMERS FLICKER AND
CRACKLE LIKE FIRE!

FLYING MODEL ROCKET

ESTES

BETA SERIES

SKILL LEVEL 1

STREAMERS FLICKER
AND CRACKLE LIKE FIRE!

FIRESTREAK™

FLYING MODEL ROCKET

SKILL LEVEL 1

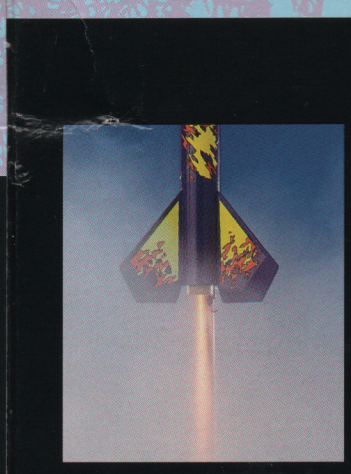

NEW! THROUGH-THE-WALL BALSA FIN ATTACHMENT

- STREAMERS STREAK THROUGH THE SKY LIKE FIRE
- CUSTOMIZE WITH PAINT OR MARKERS
- A REWARDING AND EASY BALSA FIN BUILD

Length: 37.46 cm (14.75 in.)
Diameter: 27.68 mm (1.09 in.)
Weight: 38.5 g (1.35 oz.)
Recommended Engines:
A8-3 (First Flight), B4-4, B6-4, B8-5, C5-3, C6-3, or C6-5

This model kit requires assembly. Requires white or yellow glue, engines, igniters, wadding, and launch system – NOT INCLUDED.

1 MODELE REDUIT
PEINTURE ET COLLE
NON COMPRISES

USE ONLY WITH ESTES PRODUCTS

MADE IN U.S.A.

RCHTA
RADIO CONTROL HOBBY TRADE ASSOCIATION
P.O. Box 68116 Schaumburg, IL 60168-1116

NAR

DER GRÜNE PUNKT

FIRE STREAK

FLYING MODEL ROCKET

ESTES

ESTES

ESTES INDUSTRIES
1295 H STREET
PENROSE, CO 81240

EST 2107

0 47776 02107 5

PN 36280